Z111

# Frequency to DC isolator / converter

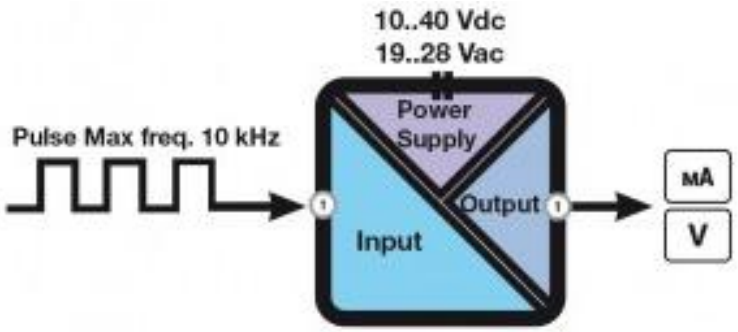
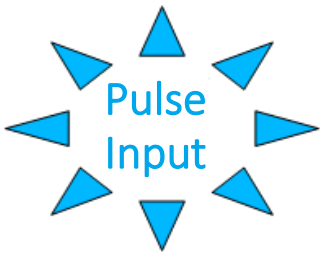
- Frequency:
  From 1 mHz (0,001 Hz) to 9.99 KHz
- Power Supply:
  19..40 (9..30 opz.) Vdc,
  19..28 Vac
- Output:
  Current 0..20, 4..20 mA;
  Voltage 0..5/10, 1..5, 2..10 V
- Settable full scale:
  From 10 mHz (0,01 Hz) to 9.99 KHz
- Isolation: 1.500 Vac